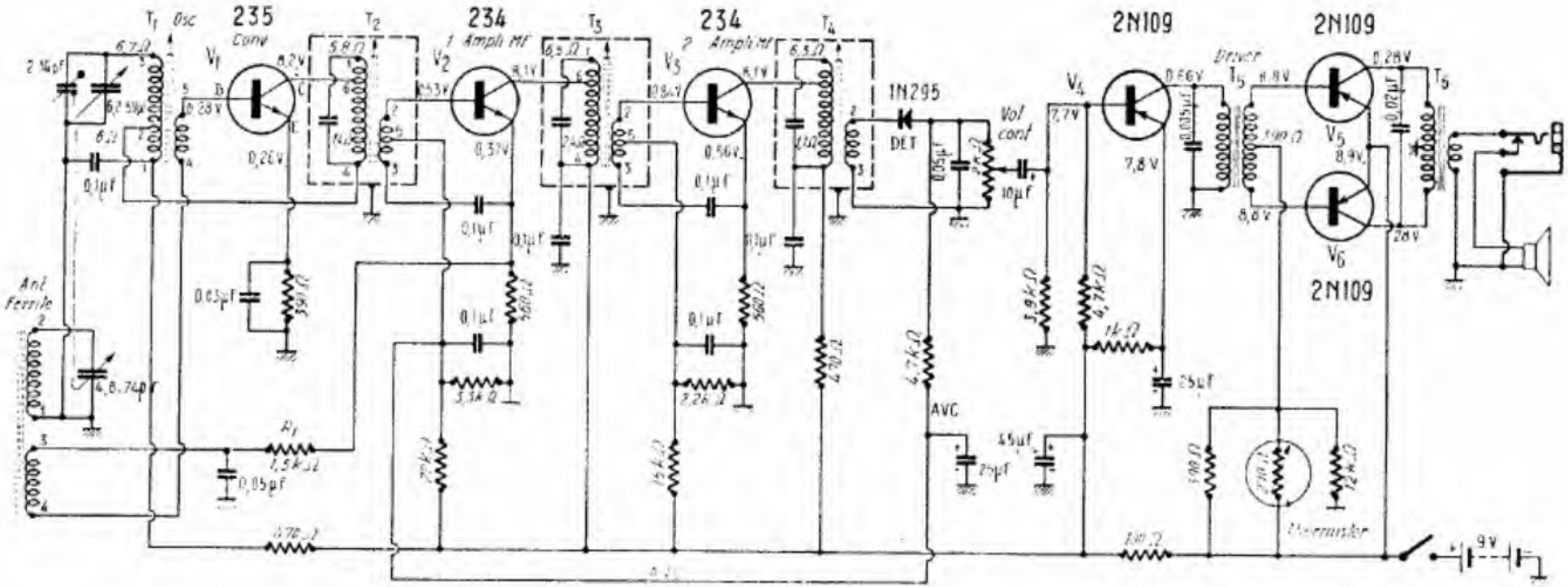
235
Conv
234
1 Ampli MF
234
2 Ampli MF
2N109
2N109
2N109
1N295
DET
Vol cont
AVC
Driver
Thermistor
Ant Ferrite
9V

RCA 7-BT-9 J